SATCOM

PART NUMBER
1103

The Satcom is an external Satellite Communicator accessory to enables Syrus GPS tracking devices with Iridium's truly global data network coverage. Plug & Connect compatible with Syrus GPS devices and easy to program and manage via Pegasus Gateway - web application – it's the ideal solution for critical scenarios & activities that request reliable, near real time, communication services without depending on a cellular network.

Global operating capability using the Iridium Satellite network.

RS-232 transparent communication with Syrus GPS device / compatible with Syrus three (3)-Port Serial Expander

Two (2) way communication with Pegasus Gateway web.

Fully programmable trigger events depending on cellular coverage.

Fully integrated and compatible with Pegasus Gateway Ecosystem

High gain, low-profile, external Iridium antenna

TECHNICAL SPECIFICATIONS

PHYSICAL	
Unit Dimensions (inches)	4.335 x 2.246 x 1.063
Material	GRABS UL 94HB Plastic

ENVIRONMENTAL	
Operating Temperature	40°C to 85°C
Storage Temperature	40°C to 85°C
Operating Humidity	Up to 75% non-condensing
Storage Humidity	Up to 93% non-condensing

ELECTRICAL	
Operating Voltage	8 - 32VDC
Current Consumption	Idle: 25mA Tx/Rx: 80mA

SATELLITE TRANSCEIVER SPECS	
Ref	9602SBD
Network	Iridium
Frequency Range	1616MHz to 1626.5MHz
Duplexing Method	TFF (Tune Domain Duplex)
Multiplexing Mode	Support

ANTENNA CHARACTERISTICS	
Impedance	500hm
Gain (max)	3dBi
Polarization	RHCP
VSWR (max operational)	1.5:1
Connector	SMA

ADDITIONAL FEATURES
Over the air firmware upgrade
SatCom originated message size 340 bytes Maximum
SatCom terminated message size 270 bytes Reverse
Polarization and transient voltage protection

MOUNTING	
Screw Mount	Yes

PINOUT

COLOR	CABLE	DESCRIPTION
GREEN	MAIN POWER (8-32V)	Must be connected to the Syrus main power cable (green – pin #7) or directly to the vehicle's battery positive terminal.
BLACK	GROUND (0V - GND)	Must be connected to the Syrus GND (black – pin #1) or the same GND connection used by the Syrus. This is usually the vehicle's battery negative terminal.
BLUE/RED	TX	Must be connected to the Syrus Rx Cable (purple).
WHITE/ORANGE	RX	Must be connected to the Syrus Tx Cable * (orange) **Brown on S3GLC-16 & SL 1645 devices.*

DIMENSIONS

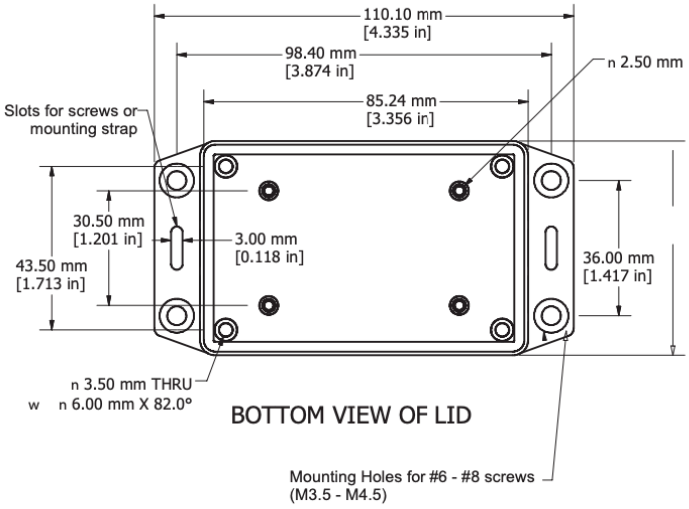

PEGASUS CONFIGURATION

COMMANDS	

Set up Destination Address 1 for Satcom
`>SDA1;P16<`
	Enable the Satcom Mode
	`>SXABR19200<`
	`>SXASMM1<`

Disable Satcom Mode
`>SXABR115200<`
`>SXASMM0<`	

* For more information on the latest stable firmware versions, please visit our support website at support.digitalcomtech.com

ONLY AVAILABLE ON Pegasus Gateway

POWERED BY: iridium